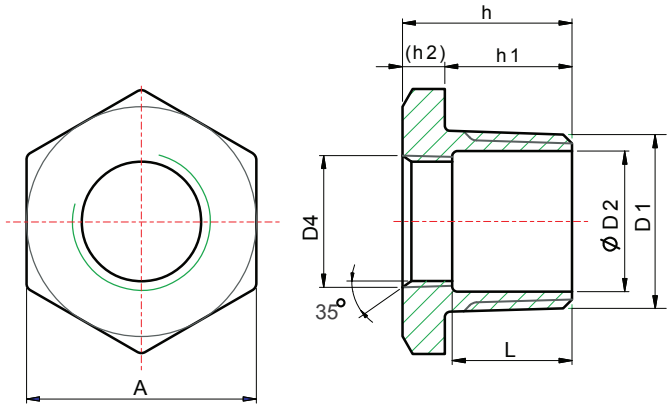

DESIGN FEATURES:

- THREAD: NPT
- CF8 (304) & CF8M (316)

DIMENSIONS

unit : inch

SIZE	A	L	D1	D2	D4	h	h1	(h2)
1/4"x1/8"	0.67	0.59	1/4"	0.33	1/8"	0.89	0.67	0.22
3/8"x1/8"	0.87	0.59	3/8"	0.43	1/8"	0.91	0.67	0.24
3/8"x1/4"	0.87	-	3/8"	0.43	1/4"	0.91	0.67	0.24
1/2"x1/8"	1.02	0.67	1/2"	0.57	1/8"	1.00	0.79	0.22
1/2"x1/4"	1.02	0.67	1/2"	0.57	1/4"	1.00	0.79	0.22
1/2"x3/8"	1.02	-	1/2"	0.57	3/8"	1.00	0.79	0.22
3/4"x1/8"	1.26	0.69	3/4"	0.71	1/8"	1.04	0.79	0.26
3/4"x1/4"	1.26	0.69	3/4"	0.71	1/4"	1.04	0.79	0.26
3/4"x3/8"	1.26	0.69	3/4"	0.71	3/8"	1.04	0.79	0.26
3/4"x1/2"	1.26	-	3/4"	0.71	1/2"	1.04	0.79	0.26
1"x1/8"	1.50	0.96	1"	1.02	1/8"	1.32	1.00	0.31
1"x1/4"	1.50	0.96	1"	1.02	1/4"	1.32	1.00	0.31
1"x3/8"	1.50	0.96	1"	1.02	3/8"	1.32	1.00	0.31
1"x1/2"	1.50	0.87	1"	1.02	1/2"	1.32	1.00	0.31
1"x3/4"	1.50	0.81	1"	1.02	3/4"	1.32	1.00	0.31
1 1/4"x1/8"	1.81	1.02	1 1/4"	13.8	1/8"	1.34	1.02	0.31
1 1/4"x1/4"	1.81	0.96	1 1/4"	13.8	1/4"	1.34	1.02	0.31
1 1/4"x3/8"	1.81	0.96	1 1/4"	13.8	3/8"	1.34	1.02	0.31
1 1/4"x1/2"	1.81	0.91	1 1/4"	13.8	1/2"	1.34	1.02	0.31
1 1/4"x3/4"	1.81	0.83	1 1/4"	13.8	3/4"	1.34	1.02	0.31
1 1/4"x1"	1.81	0.77	1 1/4"	13.8	1"	1.34	1.02	0.31

DIMENSIONS

unit : inch

SIZE	A	L	D1	D2	D4	h	h1	(h2)
1 1/2"x1/8"	2.05	1.06	1 1/2"	1.57	1/8"	1.42	1.02	0.39
1 1/2"x1/4"	2.05	1.06	1 1/2"	1.57	1/4"	1.42	1.02	0.39
1 1/2"x3/8"	2.05	1.02	1 1/2"	1.57	3/8"	1.42	1.02	0.39
1 1/2"x1/2"	2.05	0.94	1 1/2"	1.57	1/2"	1.42	1.02	0.39
1 1/2"x3/4"	2.05	0.91	1 1/2"	1.57	3/4"	1.42	1.02	0.39
1 1/2"x1"	2.05	0.83	1 1/2"	1.57	1"	1.42	1.02	0.39
1 1/2"x1 1/4"	2.05	0.73	1 1/2"	1.57	1 1/4"	1.42	1.02	0.39
2"x1/8"	2.48	1.10	2"	2.01	1/8"	1.42	1.00	0.41
2"x1/4"	2.48	1.06	2"	2.01	1/4"	1.42	1.00	0.41
2"x3/8"	2.48	1.06	2"	2.01	3/8"	1.42	1.00	0.41
2"x1/2"	2.48	0.98	2"	2.01	1/2"	1.42	1.00	0.41
2"x3/4"	2.48	0.91	2"	2.01	3/4"	1.42	1.00	0.41
2"x1"	2.48	0.87	2"	2.01	1"	1.42	1.00	0.41
2"x1 1/4"	2.48	0.79	2"	2.01	1 1/4"	1.42	1.00	0.41
2"x1 1/2"	2.48	0.79	2"	2.01	1 1/2"	1.42	1.00	0.41
2 1/2"x1/2"	3.15	1.52	2 1/2"	2.48	1/2"	1.93	1.46	0.47
2 1/2"x3/4"	3.15	1.44	2 1/2"	2.48	3/4"	1.93	1.46	0.47
2 1/2"x1"	3.15	1.36	2 1/2"	2.48	1"	1.93	1.46	0.47
2 1/2"x1 1/4"	3.15	1.24	2 1/2"	2.48	1 1/4"	1.93	1.46	0.47
2 1/2"x1 1/2"	3.15	1.18	2 1/2"	2.48	1 1/2"	1.93	1.46	0.47
2 1/2"x2"	3.15	1.14	2 1/2"	2.48	2"	1.93	1.46	0.47
3"x1/2"	3.74	1.54	3"	3.03	1/2"	1.97	1.46	0.51
3"x3/4"	3.74	1.46	3"	3.03	3/4"	1.97	1.46	0.51
3"x1"	3.74	1.38	3"	3.03	1"	1.97	1.46	0.51
3"x1 1/4"	3.74	1.26	3"	3.03	1 1/4"	1.97	1.46	0.51
3"1 1/2"	3.74	1.22	3"	3.03	1 1/2"	1.97	1.46	0.51
3"x2"	3.74	1.18	3"	3.03	2"	1.97	1.46	0.51
3"x2 1/2"	3.74	1.02	3"	3.03	2 1/2"	1.97	1.46	0.51
4"x1/2"	4.72	1.57	4"	3.98	1/2"	2.01	1.46	0.55
4"x3/4"	4.72	1.52	4"	3.98	3/4"	2.01	1.46	0.55
4"x1"	4.72	1.42	4"	3.98	1"	2.01	1.46	0.55
4"x1 1/4"	4.72	1.32	4"	3.98	1 1/4"	2.01	1.46	0.55
4"x1 1/2"	4.72	1.26	4"	3.98	1 1/2"	2.01	1.46	0.55
4"x2"	4.72	1.22	4"	3.98	2"	2.01	1.46	0.55
4"x2 1/2"	4.72	1.10	4"	3.98	2 1/2"	2.01	1.46	0.55
4"x3"	4.72	1.02	4"	3.98	3"	2.01	1.46	0.55